132 Ball hose bibcock

Available sizes: 3/8”x3/4”, 1/2”x3/4”, 3/4”x1”, 1”x1”1/4

SIZE	PRESSURE	CODE	PACKING
3/8" (DN 10)	15bar/217.5psi	1320038	10/120
1/2" (DN 15)	15bar/217.5psi	1320012	10/120
3/4" (DN 20)	15bar/217.5psi	1320034	6/72
1" (DN 25)	12bar/174psi	1320100	6/42

CERTIFICATIONS

TECHNICAL SPECIFICATIONS

Body in nickel-plated brass.
Hose connection in brass.
Lever handle in steel or flat lever handle in lined steel or T handle in aluminium.
Minimum and maximum working temperatures: -20°C, 80°C.
Threads: ISO 228 (equivalent to DIN EN ISO 228 and BS EN ISO 228).

OVERALL DIMENSIONS

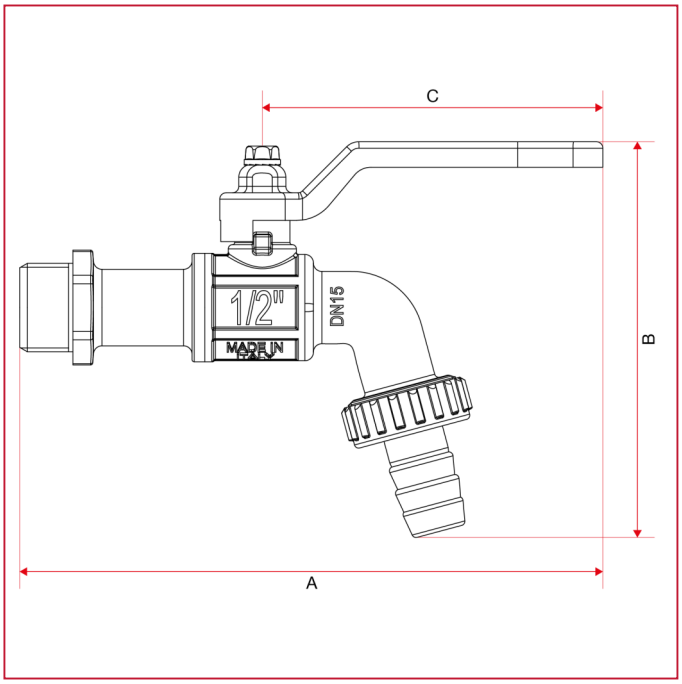

BIBCOCKS

	3/8"	1/2"	3/4"	1"
DN	10	15	20	25
A	135	137	148,5	158
B	93	93	108,5	126
C	80	80	88,5	88,5
Kg/cm2 bar	15	15	15	12
LBS - psi	217,5	217,5	217,5	174

MATERIALS

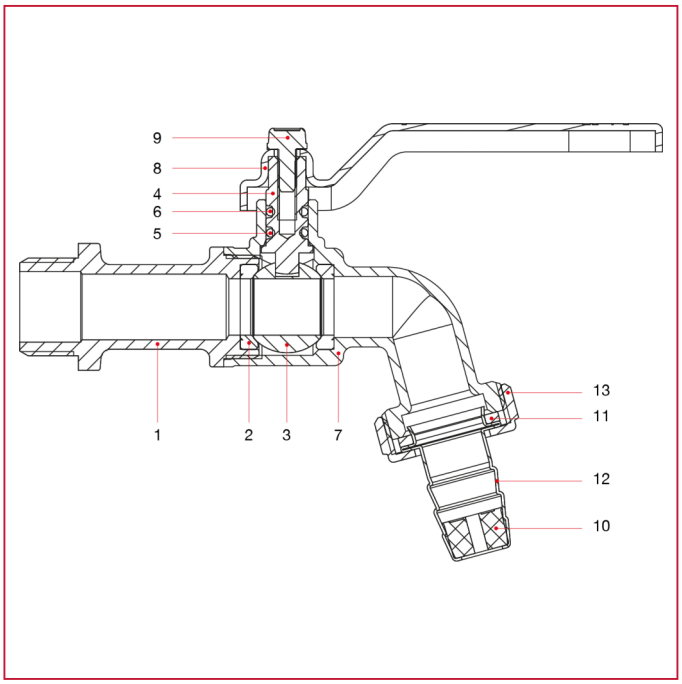

POS.	DESCRIPTION	N.	MATERIAL
1	End adapter	1	Nickel-plated brass CW617N
2	Seat	2	P.T.F.E.
3	Ball	1	Chrome-plated brass CW614N
4	Stem	1	Brass CW614N
5	O-ring	1	NBR
6	O-ring	1	Viton®
7	Body	1	Nickel-plated brass CW617N
8	Lever handle	1	Varnished steel P04
9	Screw	1	Zinc-plated steel C4C
10	Hose end	1	Polymer
11	Washer	1	Elastomer
12	Hose connection	1	Nickel-plated brass CW508L
13	Nut	1	Nickel-plated brass CW617N